DYNAMIC EQUIVALENCE BASED DIGITAL TWIN FRAMEWORK FOR ACTIVE DISTRIBUTION SYSTEM

Report
(Project Phase IV)

Submitted By

AKASH SANJAYKUMAR MALKHEDE
(Roll No. M241267EE)

In partial fulfillment for the award of the Degree of

MASTER OF TECHNOLOGY
IN
ELECTRICAL ENGINEERING
(POWER SYSTEMS)

Under the guidance of
Dr. DEVESH SHUKLA

DEPARTMENT OF ELECTRICAL ENGINEERING
NATIONAL INSTITUTE OF TECHNOLOGY CALICUT
NIT CAMPUS P.O., CALICUT - 673601, INDIA

FEBRUARY 2026

ACKNOWLEDGEMENT

It is a great pleasure to acknowledge all those who have assisted and supported me for successfully completing my project.

First of all, I thank God Almighty for his blessings as it is only through his grace that I was able to complete my project successfully.

I take this opportunity to extend my heartfelt gratitude towards my project guide, Dr.Devesh Shukla , Assistant Professor, Department of Electrical Engineering, for his invaluable guidance, encouragement, and unwavering support throughout this project. His expertise and insights have been instrumental in shaping the direction of this work and ensuring its successful completion.

I would like to convey my gratitude towards Dr.Sunitha R, Associate Professor, Department of Electrical Engineering, Dr.Sukriti Tiwari, Assistant Professor, Department of Electrical, and Dr. Vivek Mohan, Assistant Professor, Department of Electrical Engineering for providing valuable guidance and support during the course of this work.

I am profoundly grateful to the Department of Electrical Engineering, NIT Calicut, for providing me with the necessary resources and a conducive environment for research. I extend my heartfelt thanks to all the faculty members and staff for their assistance and support during this journey.

I would also like to thank my peers and colleagues for their encouragement and constructive feedback, which helped refine my work. Their camaraderie and discussions have enriched my learning experience.

Lastly, I am deeply indebted to my family for their unwavering support, patience, and encouragement, which have been a source of strength throughout my academic endeavors.

Thank you all for contributing to the successful completion of this project.

AKASH SANJAYKUMAR MALKHEDE

DECLARATION

I hereby declare that this report on "Dynamic Equivalence Based Digital Twin Framework For Active Distribution System " is my own work and that, to the best of my knowledge and belief, it contains no material previously published or written by another person nor material which has been accepted for the award of any other degree or diploma of the university or other institutes of higher learning, except where due acknowledgment has been made in the text.

Place: Calicut
Date: February 23, 2026

Name: Akash Sanjaykumar Malkhede
Roll No: M241267EE

CERTIFICATE

This is to certify that the report entitled "Dynamic Equivalence Based Digital Twin Framework For Active Distribution System " submitted by ***Akash Sanjaykumar Malkhede (Roll No.*** **M241267EE***) to the National Institute of Technology Calicut towards partial fulfillment of the requirements for the award of* ***Degree of Master of Technology in Electrical Engineering (Power Systems)*** *is a bonafide record of the project (*EE7293E *Project Phase IV) carried out by him under my supervision and guidance.*

Dr.Devesh Shukla
Assistant Professor
Department of Electrical Engineering

Attested by

Dr. Jagadanand G
Professor & Head
Department of Electrical Engineering

Place: Calicut
Date: February 23, 2026

Department Seal

ABSTRACT

Active distribution systems are becoming more complex as solar units, inverter-based generators, storage systems, and flexible loads continue to grow. These components react quickly to changes in the network, which makes the system dynamic and sometimes difficult to study or monitor in real time. A digital twin can help by creating a virtual version of the grid that mirrors the real one and supports analysis, prediction, and operational decisions.

However, building a detailed digital twin for an entire distribution system can be slow and computationally heavy. This work addresses this challenge by introducing a dynamic equivalent model that simplifies a active distribution system while still keeping its important electrical behavior intact. In this project, that idea is implemented and adapted for an active distribution system. Instead of modeling every individual device, the system is reduced to an equivalent model that behaves almost the same during normal operation and disturbances.

The simplified model is then evaluated against the full system to check accuracy, speed, and usefulness for real-time digital-twin applications. The results show that dynamic equivalencing can significantly reduce simulation effort without losing meaningful system behavior, making it a practical approach for modern smart-grid monitoring, planning, and control.

CONTENTS

List of Abbreviation **iii**

1 INTRODUCTION **1**

1.1 Introduction 1

1.2 Literature Review 2

1.3 Problem Definition 2

1.4 Objective 3

1.4.1 To develop an active distribution system. 3

1.4.2 To develop a dynamic equivalence model of active distribution system. . . 3

1.4.3 To develop a digital twin based on dynamic equivalence model of active distribution system. 3

1.5 Outline of the Report 3

2 METHODOLOGY **5**

2.1 Introduction 5

2.2 Significance of Models 5

2.3 ADS along with DEM 6

2.4 MODELING OF ACTIVE DISTRIBUTION SYSTEM 7

2.4.1 Data of Each Component of Active Distribution System 7

2.4.2 Three phase grid connected solar PV system 9

2.4.3 Photovoltaic Array Data 10

2.4.4 Specifications of the PV solar converter (boost converter) 10

2.5 MATHEMATICAL MODELING OF DYNAMIC EQUIVALENT MODEL 11

2.5.1 Mathematical formulation of P_{eq} & Q_eq 12

3 RESULTS AND DISCUSSION **13**

3.0.1 Case A (without fault) 13

3.0.2 Case B (with fault) 15

4 CONCLUSION **17**

4.1 Conclusion 17

List of Abbreviation

ADS	-	Active distribution system
PV	-	Photo Voltaic
DEM	-	Dynamic Equivalent Model
DT	-	Digital Twin

List of Figures

2.1 Single line diagram of ADS along with DEM 6
2.2 Single line diagram of ADS 7
2.3 Single line diagram Solar PV System of Active Distribution System 9
2.4 Dynamic equivalent model of ADS 11
2.5 P_{eq} & Q_{eq} computation in Simulink 12

3.1 (a) P vs P_eq (without fault) 14
3.2 (b) Q vs Q_eq (without fault) 14
3.3 (a) P vs P$_eq(withfault)$ 15
3.4 (b) Q vs Q$_eq(withfault)$ 16

List of Tables

2.1 Generators Data of Active Distribution System 8
2.2 Load Data of Active Distribution System 8
2.3 Line Data of Active Distribution System 8
2.4 Transformer Data of Active Distribution System 9
2.5 Bus Data of Active Distribution System 9
2.6 PV Module Specifications 10
2.7 Boost Converter Specifications 10
2.8 Parameters of transfer function for P_{eq} & Q_{eq} 12

CHAPTER 1
INTRODUCTION

1.1 Introduction

Active distribution systems (ADS) are rapidly evolving due to the increasing penetration of renewable energy sources, inverter-based generators, energy storage systems, and flexible loads. These components introduce fast and complex dynamic behaviors that significantly influence system stability, control, and protection. Unlike traditional passive distribution networks, modern ADS exhibit bidirectional power flows, reduced inertia, and strong interactions among distributed energy resources, making dynamic analysis more challenging [1]– [4]. Accurate dynamic modeling of active distribution systems is essential for system planning, real-time monitoring, and advanced control applications. However, developing detailed dynamic models for all individual components in large-scale ADS leads to high computational burden and increased model complexity. Such full-order models are often impractical for time-domain simulations, online security assessment, and wide-area dynamic studies, particularly when frequent operating condition changes must be considered [5], [6]. Dynamic equivalence techniques have therefore been widely investigated as an effective means to reduce system complexity while preserving key dynamic characteristics of the original network [7]. Conventional model reduction approaches, such as coherency-based aggregation and time-scale separation, have been successfully applied to transmission systems. However, these methods may not adequately capture the fast and nonlinear dynamics introduced by inverter-based resources and flexible loads in active distribution systems [1], [8]. In recent years, data-driven and hybrid modeling approaches have gained attention for dynamic modeling of complex power systems. Among these, gray box modeling provides a balanced framework by combining simplified physical representations with parameter estimation based on measured system responses [9], [10]. This approach offers improved interpretability compared to purely black-box models while maintaining sufficient flexibility to represent nonlinear and fast-varying dynamics. Motivated by these observations, this paper proposes a gray box model-based dynamic equivalence approach for active distribution systems. The objective is to develop a reduced-order dynamic equivalent that accurately reproduces the dynamic behavior of a detailed ADS model under normal operating conditions and network disturbances, while significantly reducing computational effort. The proposed approach is particularly suitable for smart-grid monitoring, planning, and control applications.

1.2 Literature Review

Research on power distribution systems has evolved significantly over the past two decades. Earlier studies viewed the distribution grid as a passive network, where electricity simply flowed from large centralized power plants to consumers. Because the system was fairly predictable, steady-state models were considered sufficient for planning and operation.

This assumption began to change once renewable energy sources, power-electronic inverters, and energy storage became common at the distribution level. Several researchers pointed out that these new technologies introduce fast dynamics, bidirectional power flow, and greater uncertainty. As a result, many traditional modeling approaches struggle to capture real system behavior, especially during disturbances, switching events, or sudden renewable fluctuations.

To better represent these changing conditions, different model-reduction and equivalencing techniques were introduced. Early equivalencing methods focused mainly on matching steady-state voltage and power values, but they could not accurately reproduce transient responses. With the growing dominance of inverter-based generation, researchers realized that system dynamics—and not just steady-state characteristics—needed to be preserved.

The base paper used in this project builds on that understanding. It proposes a dynamic equivalent model for microgrids that takes flexible components into account, such as controllable loads, power-electronic converters, and storage units. The authors show that these components significantly influence how a microgrid behaves during disturbances. By capturing their impact in an equivalent model, the paper demonstrates that it is possible to achieve accurate dynamic behavior with far fewer modeled elements, reducing computational time without losing essential system characteristics.

More recent literature shifts toward real-time grid intelligence, particularly through digital twin technology. Several studies suggest that a digital twin can improve monitoring, prediction, and decision-making in active distribution systems, but only if the underlying model is lightweight enough to run continuously and stay synchronized with real data. This highlights why dynamic equivalents are gaining importance—they provide the right balance between detail and efficiency.

Overall, existing research agrees on two key points: active distribution systems require models that reflect real dynamic behavior, and full-order detailed models are becoming too complex for real-time applications. The dynamic-equivalent approach, supported by the base paper, offers a practical pathway for implementing scalable and responsive digital-twin solutions in modern power networks.

1.3 Problem Definition

Today's distribution networks are no longer quiet, predictable systems. With rooftop solar, battery storage, EV charging, and smart loads growing everywhere, the power flow in the grid keeps

changing throughout the day. These changes happen quickly and sometimes unexpectedly, which makes it harder for utilities to monitor the system, maintain stability, and take timely decisions.

To manage this complexity, operators need a virtual model of the grid that behaves just like the real one — something that can show what is happening now and also predict what might happen next. Digital Twin technology can do this, but only if the underlying model runs fast enough and stays synchronized with real system data.

The problem is that detailed distribution-system models are too large and computationally heavy for real-time use. On the other hand, simple static models ignore the dynamic behavior of inverters, renewables, faults, and load changes. This creates a gap between accuracy and practicality. Therefore, the problem this project aims to solve is: How do we create a simplified, yet realistic dynamic model of an active distribution system that runs fast enough for a digital twin, without losing important system behavior? This includes challenges such as: reducing model size without compromising accuracy, capturing essential voltage, frequency, and power dynamics, keeping the digital twin updated with real data, ensuring it performs reliably under different operating conditions.

1.4 Objective

The key objective of this research are:

- **1.4.1 To develop an active distribution system.**

  Task 1 : Made up of model modified five bus system & solar PV system connected to PCC.

- **1.4.2 To develop a dynamic equivalence model of active distribution system.**

  Task 2 : Mathematical model where tuning of transfer functions & PID controller is to be done with 'trial & error method' to track dynamics of ADS.

- **1.4.3 To develop a digital twin based on dynamic equivalence model of active distribution system.**

  Task 3 : Active distribution system will run in real time with the help of OPAL-RT with RT-Lab as a interface between OPAL-RT & ADS model

1.5 Outline of the Report

This project focuses on building a simple yet meaningful simulink model of an active distribution system and adding a photovoltaic (PV) source to it. The work starts by explaining why modern

distribution networks are becoming more dynamic and why renewable integration matters. A short review of earlier studies and the base paper helps set the technical background. The selected network, its voltage level, load details, and PV specifications are then introduced to give a clear picture of the system being modeled. After that, the methodology describes how the model was created step by step in Simulink and how the PV unit was connected, controlled, and simulated. The results section presents the system's electrical behavior—such as voltage, current, and power—after PV integration and discusses what those observations mean. The project wraps up with key takeaways and suggestions for future improvements, like adding more renewable sources, studying faults, or developing a simplified dynamic equivalent for digital-twin applications.

CHAPTER 2
METHODOLOGY

2.1 Introduction

developing a active distribution system model in MATLAB/Simulink, integrated with inverter-based solar PV system, loads, and grid interaction. This full model is subjected to different operating conditions and disturbances—such as short-circuit faults—to observe how the microgrid behaves externally, especially in terms of voltage, current, and active–reactive power. Instead of modeling every internal component individually, the authors adopt a measurement-based approach and treat the microgrid as a grey-box system, where the point-of-common-coupling voltage, current & power act as the input of DEM and the corresponding voltage, current & power response becomes the output of DEM. Based on the control characteristics of inverter-based solar PV system, a simplified dynamic equivalent model structure is proposed, containing a limited number of parameters. These parameters are then identified and optimized using an trial & error method so that the simplified model closely matches the dynamic response of the detailed one. Finally, the equivalent model is validated by comparing its transient and steady-state responses under various scenarios, different fault severities, and benchmark test systems. This step confirms that the reduced-order model can accurately represent the original ADS's behavior while requiring far less computational effort.

2.2 Significance of Models

The importance of the developed model becomes clearer when linked to the base paper, which showed that flexible elements in a microgrid—like inverter-based generators, storage units, and smart loads—play a major role in shaping its dynamic behavior. Instead of modeling every component separately, the paper proved that a well-constructed dynamic equivalent can represent the overall system just as effectively. Building on that concept, this project applies the same approach to an active distribution system and uses it as the core of a digital twin. By keeping only the behavior that truly affects system dynamics, the equivalent model still responds realistically to disturbances, load changes, and renewable variations, but requires far less computation. This makes real-time updates and continuous monitoring much more practical. In simple terms, the model turns a complex distribution network into something lightweight, accurate, and easy to work with—making it better suited for smart-grid decision-making, operational planning, and digital intelligence. Beyond technical efficiency, the model also supports future grid needs, such as

high renewable penetration, rising EV demand, fault prediction, and adaptive control strategies. Its ability to scale, validate quickly, and integrate with real system data makes it valuable not only for researchers but also for utilities aiming to build safe, reliable, and proactive distribution networks. Ultimately, the model strengthens the foundation for practical digital-twin deployment and contributes toward more resilient and data-driven power-system operation.

2.3 ADS along with DEM

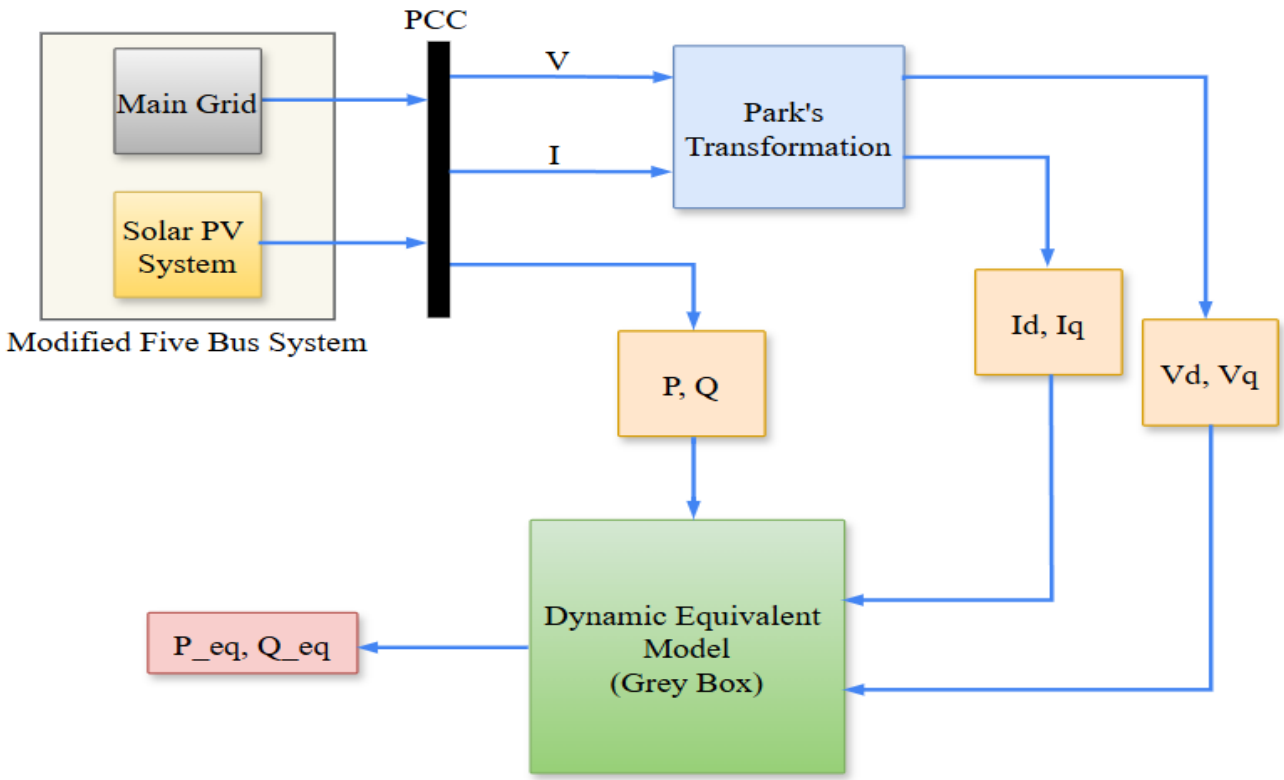

Figure 2.1: Single line diagram of ADS along with DEM

Figure 2.1 shows, Active distribution system (ADS) consists of two parts i.e. modified five bus system & solar PV system. Where the modified five bus system & solar PV is connected to a common bus. This bus is known as "Point of Common Connection" (PCC). In PCC, voltage (V) is converted into direct axis (V_d) & quadrature axis voltage (V_q) respectively. Similarly, current (I) is converted into direct axis (I_d) & quadrature axis current (I_q) respectively. The signals P, Q, I_d,I_q, V_d & V_q go as inputs to DEM and which gives output of P_{eq} & Q_{eq}.

2.4 MODELING OF ACTIVE DISTRIBUTION SYSTEM

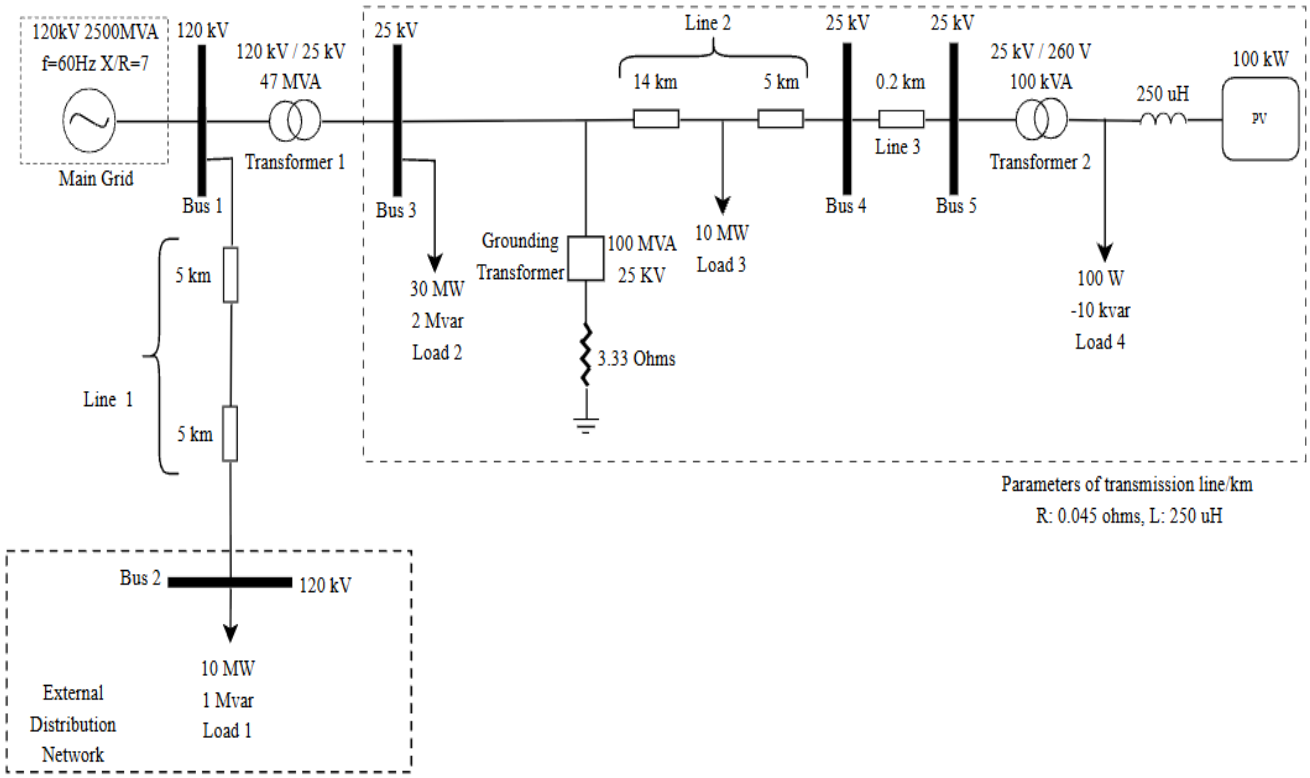

Figure 2.2: Single line diagram of ADS

The system is shown in Figure 2.2 is Simulink diagram of active distribution system. The figure 2.2 consist of a main grid, three transmission lines, five AC buses, two transformers, four loads and one integrated solar PV system. The main grid (120kV, 2500MVA and X/R =7) is connected to bus 1, which is a slack bus and other buses are PQ buses. Transformer 1 (120 kV/25kV and 47 MVA) is connected between bus 1 & bus 3. The solar PV system is connected to bus 5 through transformer 2 (25 kV/260 V and 100 kVA). Loads 1 and 2 are connected to bus 2 and 3 respectively. The line 2 is divided into two sections and load 3 is connected between these sections. Parameters of lines per kilometer are considered as, resistance (R) =0.45Ω, inductance (L) =250 µH. In figure 1 & 2, two cases are discussed (a) fault is not applied in this case 1 & apply symmetrical short-circuit fault (LLLG) on a line 1 between its two sections of 5 km each as shown in case 2.

2.4.1 Data of Each Component of Active Distribution System

Table 2.1 shows the generator data. There are two power generators employed, i.e. main grid & solar PV. Main grid supplies 10 MW active power and 0 Mvar reactive power. Maximum power a main grid can supply is 10 MW & minimum 0 MW. Similarly, maximum power a main grid can supply is 100 kW & minimum 0 kW. Table 2.2 shows the load data. There are four loads are

used, i.e. Load 1, Load 2, Load 3 & Load 4. These loads are connected to Bus 1, Bus 2, Bus 3 & Bus 4 respectively. These loads require 1 MW, 30 MW, 10 MW, 100 kW active power and 1 Mvar (inductive), 2 Mvar, 0 Mvar, 1000 Mvar (capacitive) respectively. Table 2.3 shows the line data. There are three transmission lines are used, i.e. Line 1, Line 2 & Line 3. These lines are connected between Bus 1-2, Bus 3-4 and Bus 4-5 respectively. These lines have length 1 km, 200 m & 200 m respectively. Table 2.5 shows the bus data. There are five buses are used, i.e. Bus 1, Bus 2, Bus 3, Bus 4 & Bus 5. Bus 1 is slack bus and other buses are PQ bus. The voltage at Bus 1 & Bus 2 are 120 kV each. Similarly, voltage at Bus 3, Bus 4 & Bus 5 are 25 kV each. Table 2.4 shows the transformers data. Two transformers are employed in active distribution system, i.e. transformer 1 & transformer 2. Transformer 1 is connected between bus1 & bus 3, which transforms voltage from 120 kV to 25 kV and have 47 MVA rating. Similarly, transformer 2 is connected between bus 5 & solar PV system, which transforms voltage from 25 kV to 260 V and have 100 kVA rating.

Table 2.1: Generators Data of Active Distribution System

Sr. No.	**Generators Data**					
	Generation Type	**Bus Connected**	**P (kW)**	**Q (Mvar)**	P_{max} **(kW)**	P_{min} **(kW)**
1	Main Grid	Bus 1	10000	0	10000	0
2	Solar PV	Bus 5	100e3	0	100	0

Table 2.2: Load Data of Active Distribution System

Sr. No.	**Load Data**			
	Loads	**Bus Connected**	**P (kW)**	**Q (Mvar)**
1	Load 1	Bus 2	1000	1
2	Load 2	Bus 3	30000	2
3	Load 3	Bus 4	10000	0
4	Load 4	Bus 5	100	-10000

Table 2.3: Line Data of Active Distribution System

Sr. No	**Line Data**			
	Lines	**From Bus**	**To Bus**	**Line Length (km)**
1	Line 1	Bus 1	Bus 2	1
2	Line 2	Bus 3	Bus 4	0.2
3	Line 3	Bus 4	Bus 5	0.2

Table 2.4: Transformer Data of Active Distribution System

Sr. No	Transformer Data		
	Transformer	**Primary Voltage (kV)**	**Secondary Voltage (kV)**
1	Transformer 1	120	25
2	Transformer 2	25	260

Table 2.5: Bus Data of Active Distribution System

Sr. No	Bus Data		
	Buses	**Bus Voltage (kV)**	**Bus Type**
1	Bus 1	120	Slack Bus
2	Bus 2	120	PQ Bus
3	Bus 3	25	PQ Bus
4	Bus 4	25	PQ Bus
5	Bus 5	25	PQ Bus

2.4.2 Three phase grid connected solar PV system

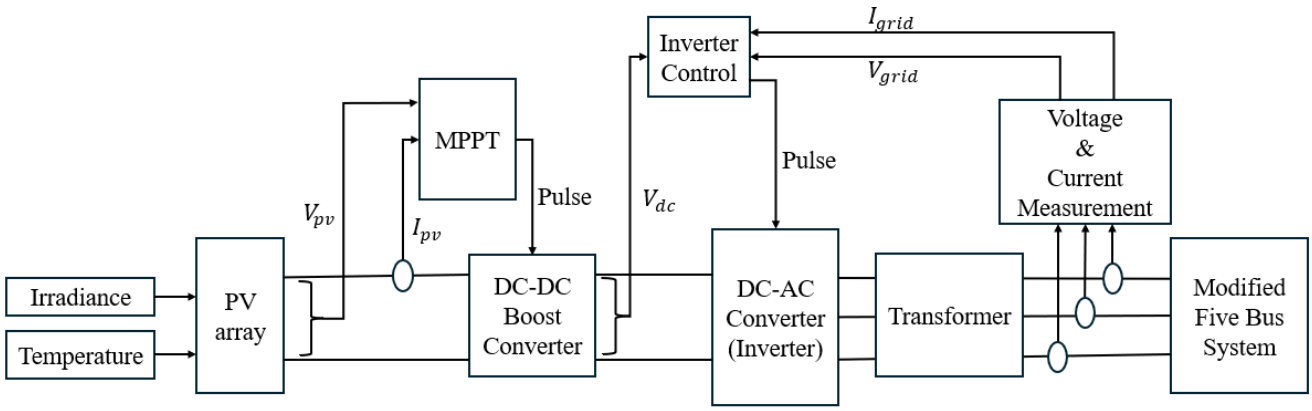

Figure 2.3: Single line diagram Solar PV System of Active Distribution System

In figure 2.3 shows grid connected solar PV system. A grid-connected PV system is built around three major blocks: the solar PV array, DC-DC converter (boost converter) and the DC-AC inverter. The system includes a PV array, DC/DC boost converter, DC link, DC/AC inverter and filter. Where irradiation is $1000W/m^2$, temperature is 25°C, PV array is employed, power generated by PV array is 100 kW, for maximum power point tracking (MPPT) incremental conductance method is used. The DC/DC boost converter operates with a duty cycle generated by the MPPT strategy and the 3-phase inverter transfers the active power to the grid. To operate this system effectively, the inverter controller continuously monitors several signals such as the three-phase grid voltage, inverter current, and PV voltage and current. These measured values are shared with the MPPT algorithm, which decides the optimal operating point of the PV array and provides a reference DC voltage.The controller inside the PV inverter works in two layers: an outer voltage loop and an inner current loop. The DC-voltage reference generated by the MPPT is compared with the actual PV voltage to compute the error. This error is processed by a PI controller, which generates the reference current needed for power transfer. The inverter then

injects this current into the grid, ensuring that the PV power synchronizes smoothly with the grid voltage.

2.4.3 Photovoltaic Array Data

To produce high power capacity in the PV system, a series and parallel combinations of a PV module will be used. user defined module will be used in this work.This module has the specifications as presented in Table 2.7.

Table 2.6: PV Module Specifications

STC Power Rating P_{mp} (W)	100,000
Maximum Power(W)	305.226
Cells per module	96
Open Circuit Voltage V_{oc} (V)	64.2
Short Circuit Current I_{sc} (A)	5.96
Voltage at Maximum Power V_{mp} (V)	54.7
Current at Maximum Power I_{mp} (A)	5.58

In Table 2.6 To produce 100 kW power capacity, 5 series and 66 parallel modules will be required. Cells per module are 96, Open Circuit Voltage Voc (V) is 64.2 V, Short Circuit Current I_{sc} (A) is 5.96, Voltage at Maximum Power V_{mp} (V) is 54.7 V, Current at Maximum Power Imp (A) is 5.58 A.

2.4.4 Specifications of the PV solar converter (boost converter)

Table 2.7: Boost Converter Specifications

Components	**Value**
Inductance (L)	5e-3
Resistance (R)	0.005
Capacitor (C1)	100e-06
DC Link Capacitor (C2)	24000e-06

Table 2.7 shows, Boost converter convert low dc voltage of 305.226 V to high dc voltage of 500 V for that it contain one PV side capacitor C1, one inductor L and one DC link capacitor C2. The Inductance L is 0.1 mH, Capacitor C1 is 500 uF, Capacitor C2 is 20000 uF, Capacitor C3 is 20000 uF.

2.5 MATHEMATICAL MODELING OF DYNAMIC

EQUIVALENT MODEL

DEM is based on the grey box approach, where some physical information of ADS is known & some parameters are to be tuned so that the output of DEM tracks the PCC active & reactive power. Dynamic equivalent model is nothing but a mathematical representation of ADS, which gives the approximate dynamics of ADS with minimal error.

The point of common connection (PCC) is the common bus where modified five bus system and solar PV system is connected. V_{abc} & I_{abc} are the three phase grid voltage & current. V_{abc} is the phase to phase, root mean square (rms) voltage. V_d & V_d are PCC direct & quadrature axis voltage respectively. I_d & I_q are PCC direct & quadrature axis current respectively. Where P_{ref} & Q_{ref} are active & reactive power reference values respectively. Id_{ref} & Iq_{ref} are direct and quadrature axes current reference values respectively.

$$delP = P_{ref} - P \tag{2.1}$$

$$delQ = Q_{ref} - Q \tag{2.2}$$

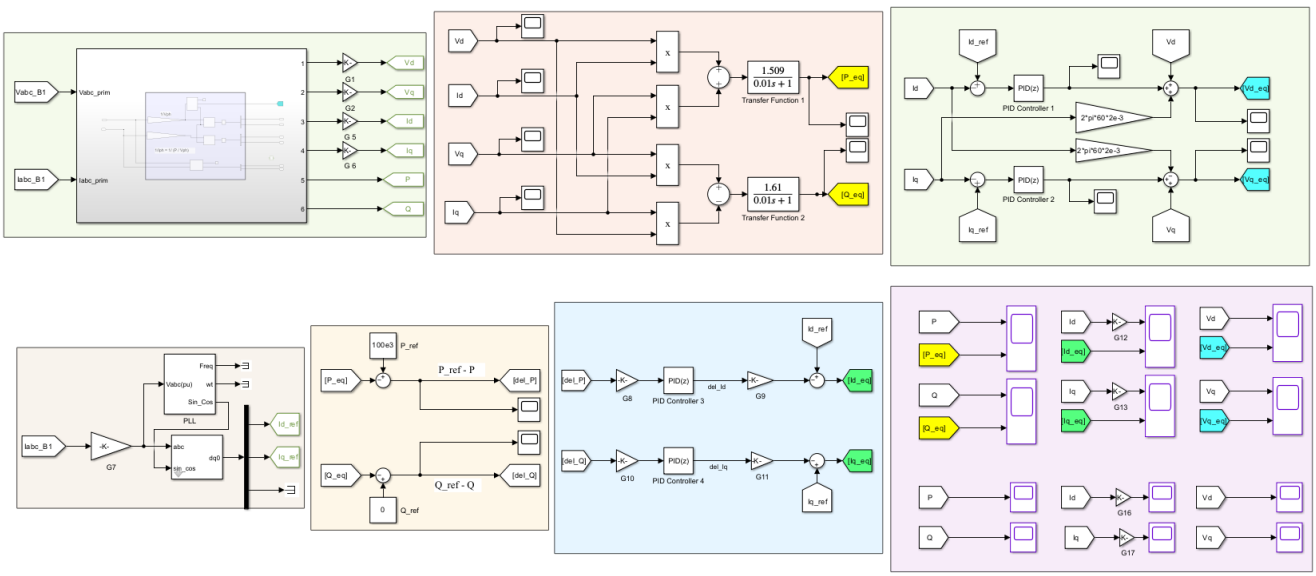

Figure 2.4: Dynamic equivalent model of ADS

Figure 2.4 shows the equivalent results for a solar PV system with PQ control strategy. Equations (1) to (6) make up the DEM structure. 'ADS model data' means the data are obtained from detailed simulation of ADS in MATLAB/SIMULINK platform. The results show that the dynamic equivalent method and model proposed in this paper have good effect on PQ control strategies on a solar PV system.

The parks transformation is used which convert grid current I_{abc} into direct axis & quadrature axis current component I_d & I_q respectively. Then the reference value of active power (P_{ref}) is

compared with actual value of active power (P) to get P. Similarly, reference value of reactive power (Q_{ref}) is compared with actual value of reactive power (Q) to get Q.

2.5.1 Mathematical formulation of P_{eq} & Q_eq

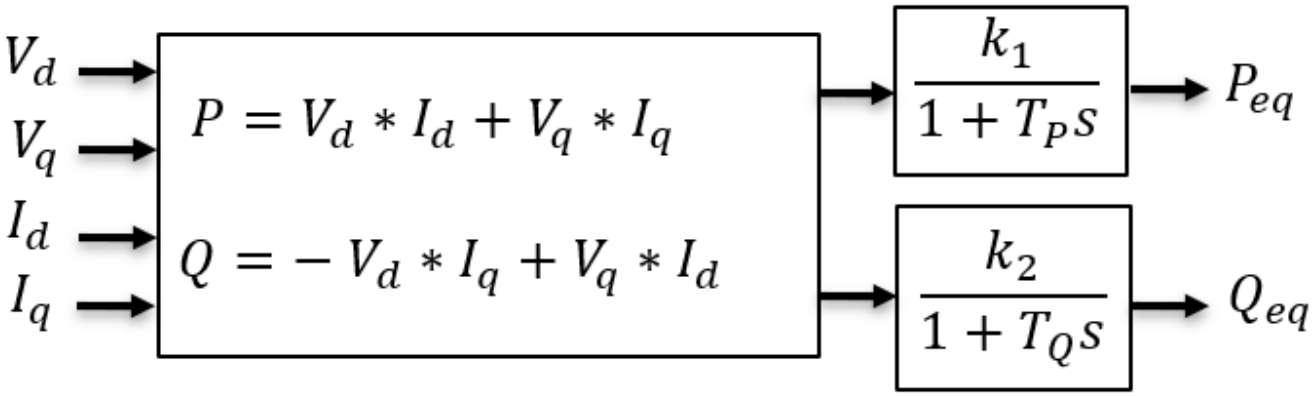

Figure 2.5: P_{eq} & Q_{eq} computation in Simulink

$$P = V_d * I_d + V_q * I_q \tag{2.3}$$

$$Q = -V_d * I_q + V_q * I_d \tag{2.4}$$

$$P_{eq} = (k_1/(1 + T_P s)) * P \tag{2.5}$$

$$Q_{eq} = (k_2/(1 + T_Q s)) * Q \tag{2.6}$$

Table 2.8: Parameters of transfer function for P_{eq} & Q_{eq}

Sr. No.	Parameters	Estimation
1	k_1	1.509
2	k_2	1.61
3	T_P	0.01
4	T_Q	0.01

Table 2.8 shows the parameters which are identified with the help of trial & error method. Where T_P & T_Q are time constants and their values are 0.01 seconds each of transfer function 1 & transfer function 2 respectively. k_1 & k_2 are the constants and their values are 1.509 & 1.61 of transfer function 1 & transfer function 2 respectively.

CHAPTER 3
RESULTS AND DISCUSSION

The ADS is going to be test for two cases i.e. Case A (without fault) & Case B (with fault). The external dynamic characteristics of ADS is shown in figure 8(a), 8(b), 9(a) and 9(b). In figure 8(a) & 8(b), there is no fault in the system. In figure 9(a) & 9(b), the three-phase short-circuit fault applied in t = 0.5 s and it recovers in t =0.6 s. There is a slight error at 0.4 sec, because the MPPT is start working after 0.4 sec. It shows the as MPPT works properly. MPPT tracks the maximum power of 100kW after 0.4 sec, that's why there is a slight error before & after start working of MPPT.

3.0.1 Case A (without fault)

The solid blue curves in Fig. 7(a) and Fig. 7(b) represent the active power (P) and reactive power (Q) outputs of the modified five-bus system model, respectively. The red dotted curves correspond to the active power (P_eq) and reactive power (Q_eq) outputs of the dynamic equivalent model (DEM). The close agreement between the two sets of curves demonstrates that the DEM accurately restores the external dynamic behavior of the modified five-bus system. A slight deviation is observed around 0.4 s, which occurs because the MPPT controller begins its operation after 0.4 s, introducing a transient response in the system.

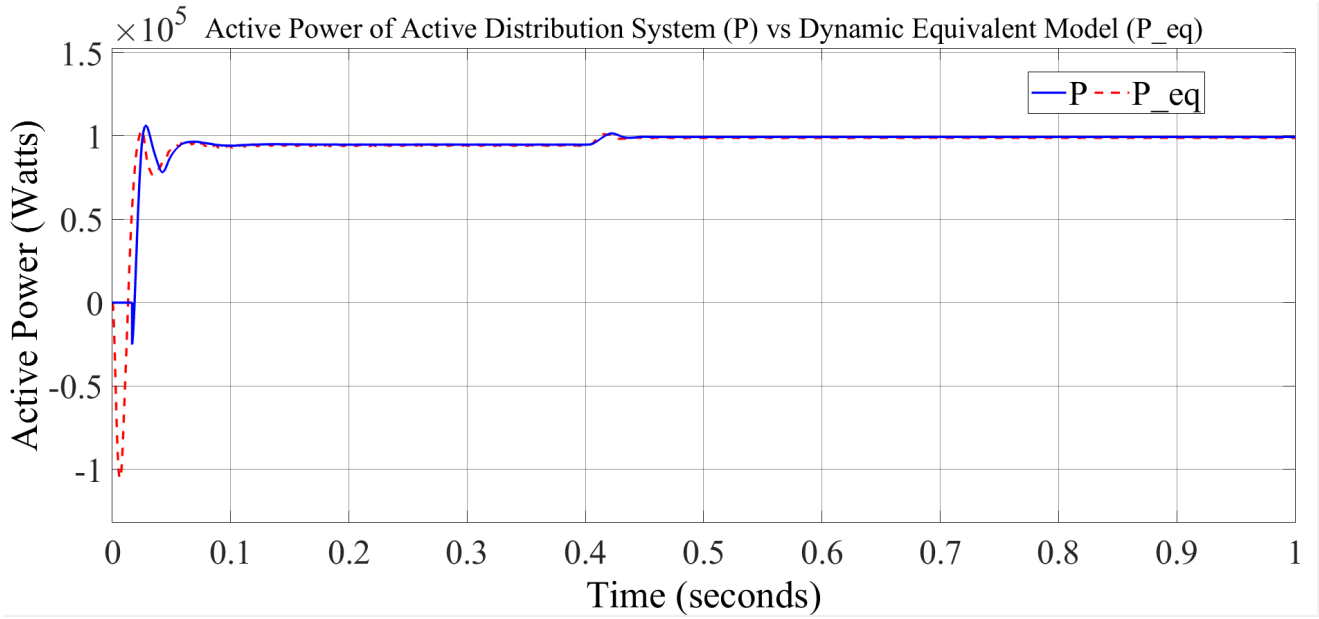

Figure 3.1: (a) P vs P_eq (without fault)

The figure shows

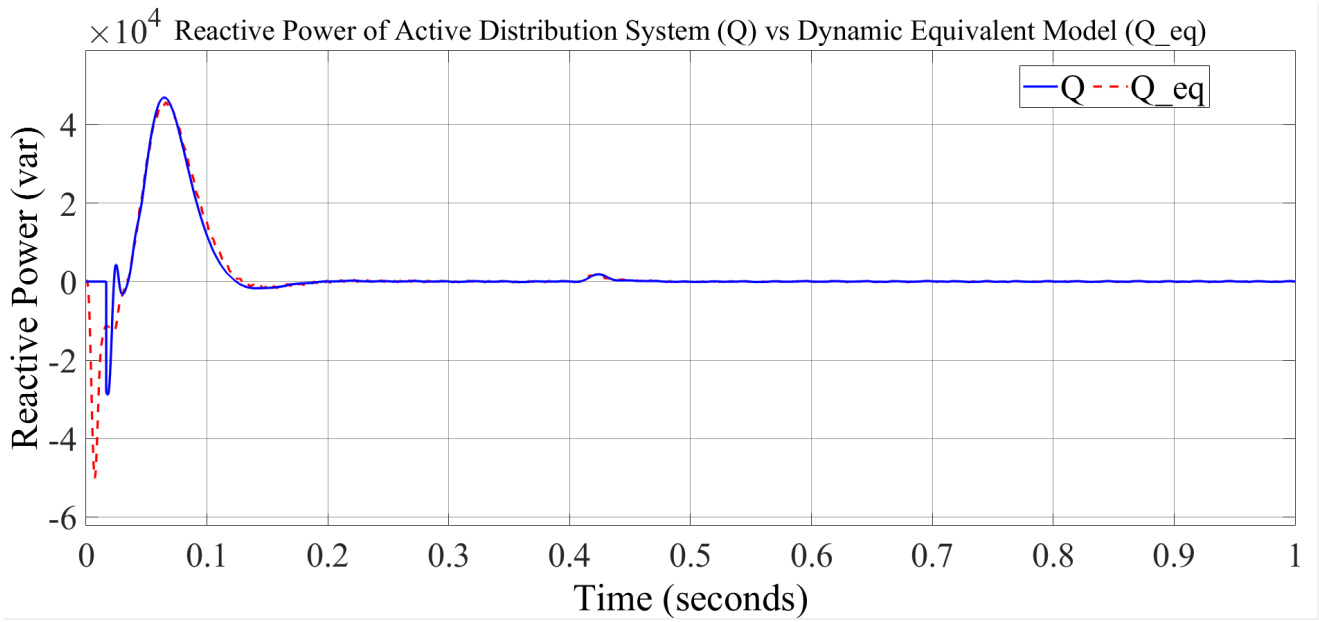

Figure 3.2: (b) Q vs Q_eq (without fault)

The ADS is going to be test for two cases i.e. Case A (without fault) & Case B (with fault). The external dynamic characteristics of ADS is shown in figure 8(a), 8(b), 9(a) and 9(b). In figure 8(a) & 8(b), there is no fault in the system. In figure 9(a) & 9(b), the three-phase short-circuit fault applied in t = 0.5 s and it recovers in t =0.6 s. There is a slight error at 0.4 sec, because the

MPPT is start working after 0.4 sec. It shows the as MPPT works properly. MPPT tracks the maximum power of 100kW after 0.4 sec, that's why there is a slight error before & after start working of MPPT.

3.0.2 Case B (with fault)

The solid blue curves in Fig. 8(a) and Fig. 8(b) represent the active power (P) and reactive power (Q) responses of the modified five-bus system, respectively, whereas the red dotted curves correspond to the active power (P_eq) and reactive power (Q_eq) responses obtained from the dynamic equivalent model (DEM). A slight deviation is observed at t = 0.4 s due to the activation of the maximum power point tracking (MPPT) controller, which introduces a transient disturbance in the system response. In the modified five-bus system, a three-phase short-circuit fault is applied at t = 0.5 s and cleared at t = 0.6 s. During the fault and post-fault intervals, the DEM response closely follows that of the detailed system model. The close agreement between the two responses, with only minimal error, demonstrates that the proposed DEM accurately preserves the external dynamic behavior of the modified five-bus system under fault conditions.

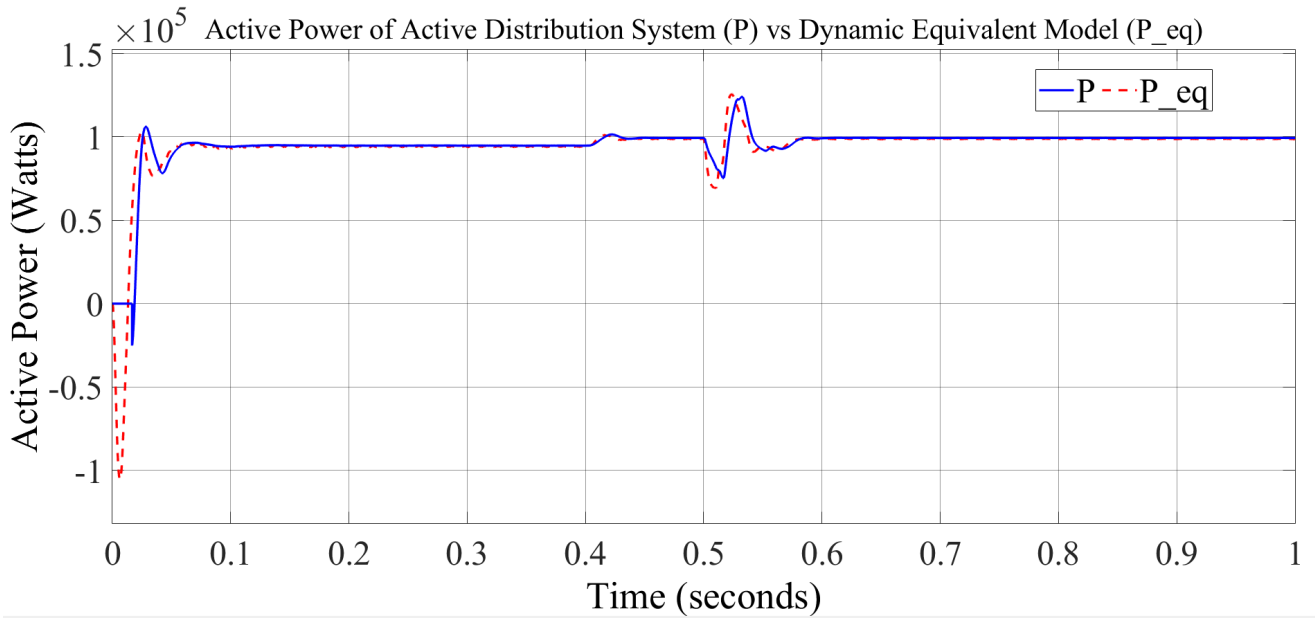

Figure 3.3: (a) P vs P$_eq(withfault)$

The figure shows

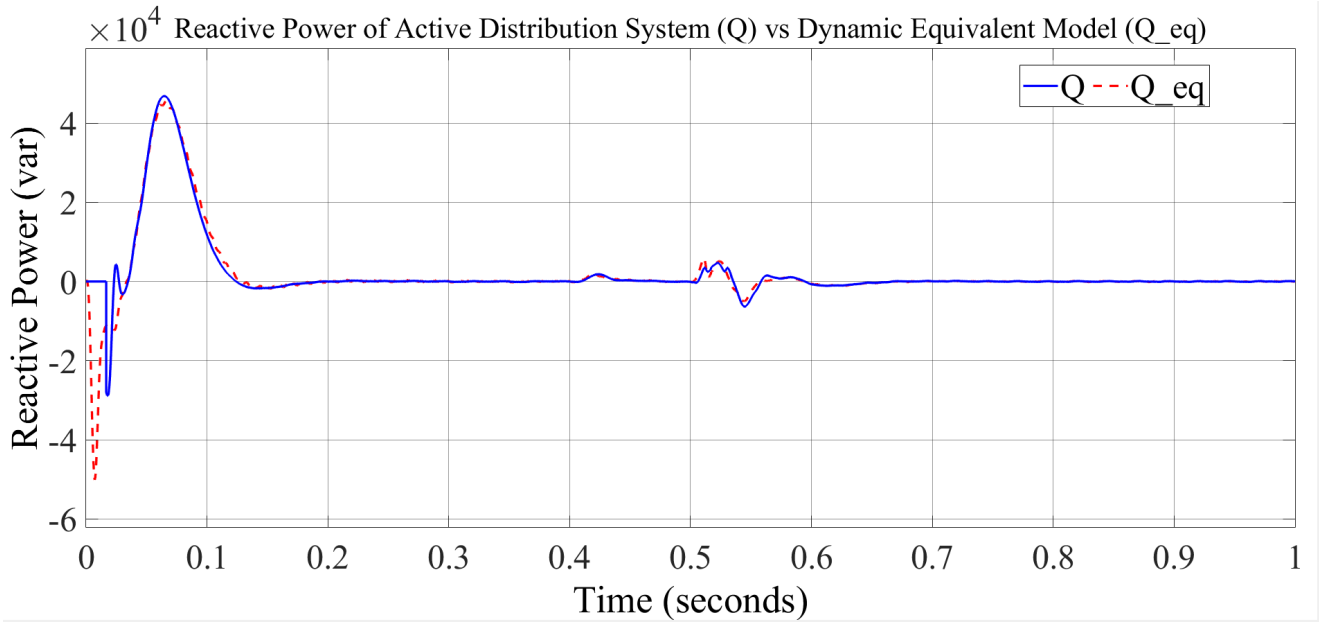

Figure 3.4: (b) Q vs $Q_eq(withfault)$

CHAPTER 4
CONCLUSION

4.1 Conclusion

This paper presented dynamic equivalent model of active distribution system, built upon a measurement-based strategy. Simulation studies demonstrate that the output of DEM tracks the output of ADS. The methodology was evaluated on ADS DEM, and the results confirm that the DEM has successfully achieved the external dynamics of ADS. The proposed framework offers a promising foundation for future development of dynamic equivalence based digital-twin for active distribution systems. The model is simulating for 1 second the fault is applied far from PCC on transmission line 1, but still DEM captures the dynamics of ADS. It means the DEM can give information of even small far away disturbances too from PCC in ADS which indicate that DEM of this paper is robust in nature. It is use to predict the behavior of ADS when there is probability of occurrence of fault on bus/transmission line of ADS due to weather conditions such as snow collected on transmission line which create sag which may lead to breaking of transmission line, because of storm there is probability of braking of transmission line.

REFERENCES

[1] J. Hua, Q. Ai, and Y. Yao, "Dynamic equivalent of microgrid considering flexible components," *IET Generation, Transmission & Distribution*, vol. 9, no. 13, pp. 1688–1696, Oct. 2015.

[2] N. Hatziargyriou, H. Asano, R. Iravani, and C. Marnay, "Microgrids," *IEEE Power and Energy Magazine*, vol. 5, no. 4, pp. 78–94, Jul.–Aug. 2007.

[3] P. Kundur, *Power System Stability and Control*. New York, NY, USA: McGraw-Hill, 1994.

[4] R. H. Lasseter, "Smart distribution: Coupled microgrids," *Proceedings of the IEEE*, vol. 99, no. 6, pp. 1074–1082, Jun. 2011.

[5] F. Milano, F. Dörfler, G. Hug, D. J. Hill, and G. Verbič, "Foundations and challenges of low-inertia systems," *Proceedings of the IEEE*, vol. 107, no. 11, pp. 1–25, Nov. 2019.

[6] J. H. Chow and P. V. Kokotović, "Time scale modeling of sparse dynamic networks," *IEEE Transactions on Automatic Control*, vol. 30, no. 8, pp. 714–722, Aug. 1985.

[7] J. H. Chow, R. J. Galarza, P. Accari, and W. W. Price, "Inertial and slow coherency aggregation algorithms for power system dynamic model reduction," *IEEE Transactions on Power Systems*, vol. 10, no. 2, pp. 680–685, May 1995.

[8] N. Zhou, Z. Huang, and D. J. Trudnowski, "Frequency measurement and control in power systems with high penetration of renewable energy," *IEEE Power & Energy Society General Meeting*, 2016.

[9] L. Ljung, *System Identification: Theory for the User*, 2nd ed. Upper Saddle River, NJ, USA: Prentice Hall, 1999.

[10] S. A. Billings, *Nonlinear System Identification: NARMAX Methods in the Time, Frequency, and Spatio-Temporal Domains*. Chichester, U.K.: Wiley, 2013.

[11] J. M. Morales, A. J. Conejo, H. Madsen, P. Pinson, and M. Zugno, *Integrating Renewables in Electricity Markets*. New York, NY, USA: Springer, 2014.

[12] IEEE PES Task Force on Benchmark Systems for Stability Controls, "Benchmark systems for network integration of renewable and distributed energy resources," *IEEE Transactions on Power Systems*, vol. 33, no. 5, pp. 1–10, Sept. 2018.